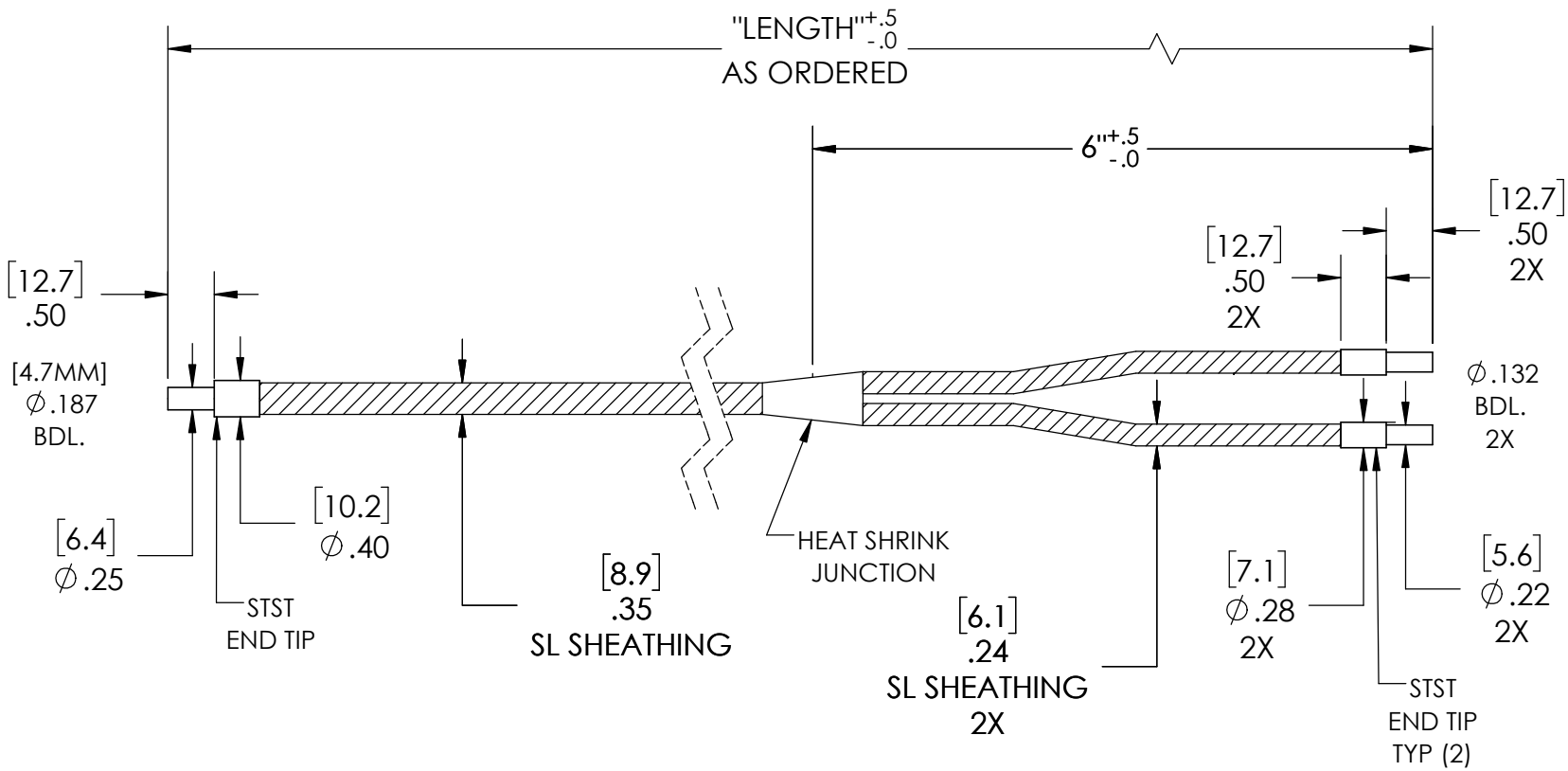

NOTES:

1) FIBER- PURELIGHT XL66 OR SL66

PART NUMBER	LENGTH	REV
FTIIG16751	D3/16 X 1FT. (4.8MM X .3M)	A
FTIIG16752	D3/16 X 2FT. (4.8MM X .6M)	A
FTIIG16753	D3/16 X 3FT. (4.8MM X .9M)	A
FTIIG16754	D3/16 X 4FT. (4.8MM X 1.2M)	A
FTIIG16755	D3/16 X 5FT. (4.8MM X 1.5M)	A
FTIIG16756	D3/16 X 6FT. (4.8MM X 1.8M)	A
FTIIG16757	D3/16 X 10FT. (4.8MM X 3M)	A
FTIIG16758	D3/16 X 15FT. (4.8MM X 4.5M)	A
FTIIG16759	D3/16 X 20FT. (4.8MM X 6M)	A
FTIIG16760	D3/16 X 30FT. (4.8MM X 9M)	A

PROPRIETARY AND CONFIDENTIAL

THE INFORMATION CONTAINED IN THIS DRAWING IS THE SOLE PROPERTY OF FIBEROPTICS TECHNOLOGY. ANY REPRODUCTION IN PART OR AS A WHOLE WITHOUT THE WRITTEN PERMISSION OF FIBEROPTICS TECHNOLOGY IS PROHIBITED.

UNLESS OTHERWISE SPECIFIED:

DIMENSIONS ARE IN INCHES
TOLERANCES:
ANGULAR: MACH ±2°
TWO PLACE DECIMAL ±.010
THREE PLACE DECIMAL ±.005

INTERPRET GEOMETRIC TOLERANCING PER:

MATERIAL
-

FINISH
-

DO NOT SCALE DRAWING

	NAME	DATE
DRAWN	MH	04/21/2020
CHECKED	SG	07/10/2020
ENG APPR.	SG	08/07/2020
MFG APPR.		
Q.A.		

COMMENTS:

FIBEROPTICS TECHNOLOGY

TITLE:

D3/16 BIFURCATED LG

SIZE	DWG. NO.	REV
A	SEE CHART	SEE CHART

SCALE: 1:2 | SHEET 1 OF 1

5 4 3 2 1